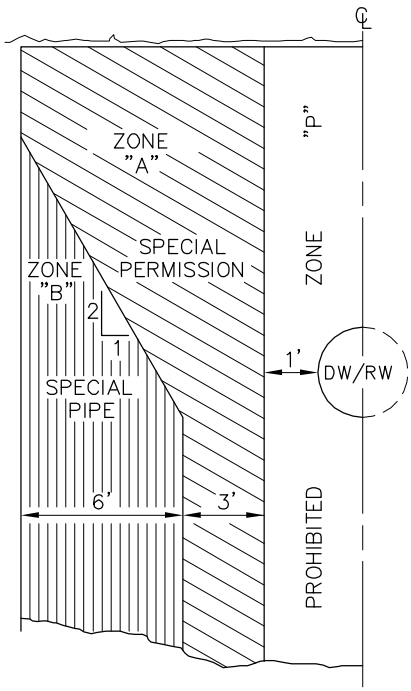

SEWER MAIN PARALLEL TO WATER MAIN

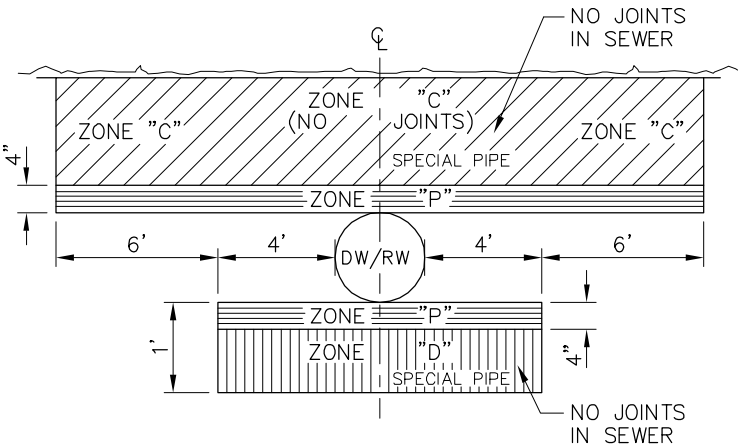

NOTE: "P" IS A PROHIBITED CONSTRUCTION ZONE.

SEWER MAIN CROSSING WATER MAIN

SPECIAL CONSTRUCTION REQUIRED FOR SEWER

ZONE

"A" NO SEWER LINES PARALLEL TO WATER MAINS SHALL BE PERMITTED IN THIS ZONE WITHOUT APPROVAL FROM COUNTY AND STATE DEPARTMENTS OF HEALTH SERVICES AND THE DISTRICT.

"B" SEWER MAIN SHALL BE CONSTRUCTED OF:

1. EXTRA STRENGTH VITRIFIED CLAY PIPE WITH COMPRESSION JOINT.
2. PLASTIC SEWER PIPE WITH RUBBER RING JOINTS (PER ASTM D3034) OR EQUIVALENT.
3. CAST OR DUCTILE IRON PIPE WITH COMPRESSION JOINTS.
4. REINFORCED CONCRETE PRESSURE PIPE WITH COMPRESSION JOINT (PER AWWA C302-74).

"C" A SEWER MAIN SHALL BE CONSTRUCTED OF:

1. DUCTILE IRON PIPE WITH HOT DIP BITUMINOUS COATING AND MECHANICAL JOINTS.
2. A CONTINUOUS SECTION OF CLASS 200 (DR 14 PER AWWA C900) PLASTIC PIPE OR EQUIVALENT, CENTERED OVER THE PIPE BEING CROSSED.
3. A CONTINOUS SECTION OF REINFORCED CONCRETE PRESSURE PIPE (PER AWWA C302-74) CENTERED OVER THE PIPE BEING CROSSED.
4. ANY SEWER PIPE WITHIN A CONTINUOUS SLEEVE.

"D" A SEWER MAIN SHALL BE CONSTRUCTED OF:

1. A CONTINUOUS SECTION OF DUCTILE IRON PIPE WITH HOT DIP BITUMINOUS COATING.
2. A CONTINUOUS SECTION OF CLASS 200 (DR 14 PER AWWA C900) PLASTIC PIPE OR EQUIVALENT, CENTERED OVER THE PIPE BEING CROSSED.
3. A CONTINOUS SECTION OF REINFORCED CONCRETE PRESSURE PIPE (PER AWWA C302-74) CENTERED OVER THE PIPE BEING CROSSED.
4. ANY SEWER PIPE WITHIN A CONTINUOUS SLEEVE.
5. ANY SEWER PIPE SEPARATED BY A TEN-FOOT BY TEN-FOOT, FOUR-INCH-THICK REINFORCED CONCRETE SLAB.

"P" NO SEWER MAIN SHALL BE CONSTRUCTED PER SECTION 64630 (2) CALIFORNIA ADMINISTRATIVE CODE, TITLE 22.

DW = DOMESTIC WATER MAIN
RW = RECYCLED WATER MAIN

BASIC SEPARATION STANDARDS

1. PARALLEL CONSTRUCTION: THE HORIZONTAL DISTANCE BETWEEN PRESSURE DOMESTIC WATER AND RECYCLED WATER MAINS AND SEWER LINES SHALL BE AT LEAST 10 FEET.
2. PERPENDICULAR CONSTRUCTION (CROSSING): PRESSURE WATER MAINS SHALL BE AT LEAST ONE FOOT ABOVE SANITARY SEWER AND RECYCLED WATER LINES WHERE THESE LINES MUST CROSS.

MOULTON NIGUEL WATER DISTRICT	S-12
DESIGN CRITERIA FOR SEPARATION OF WATER AND SEWER MAINS FOR NEW SEWER MAINS	